© 2021 All rights reserved.
This document may not, in whole or in part, be copied, photocopied, reproduced, translated or converted to any electronic or machine readable from without prior written permission of Mehmet Günce Akkoyun.
Engineer contact : akkoyun@me.com

Property of STF Irrigation

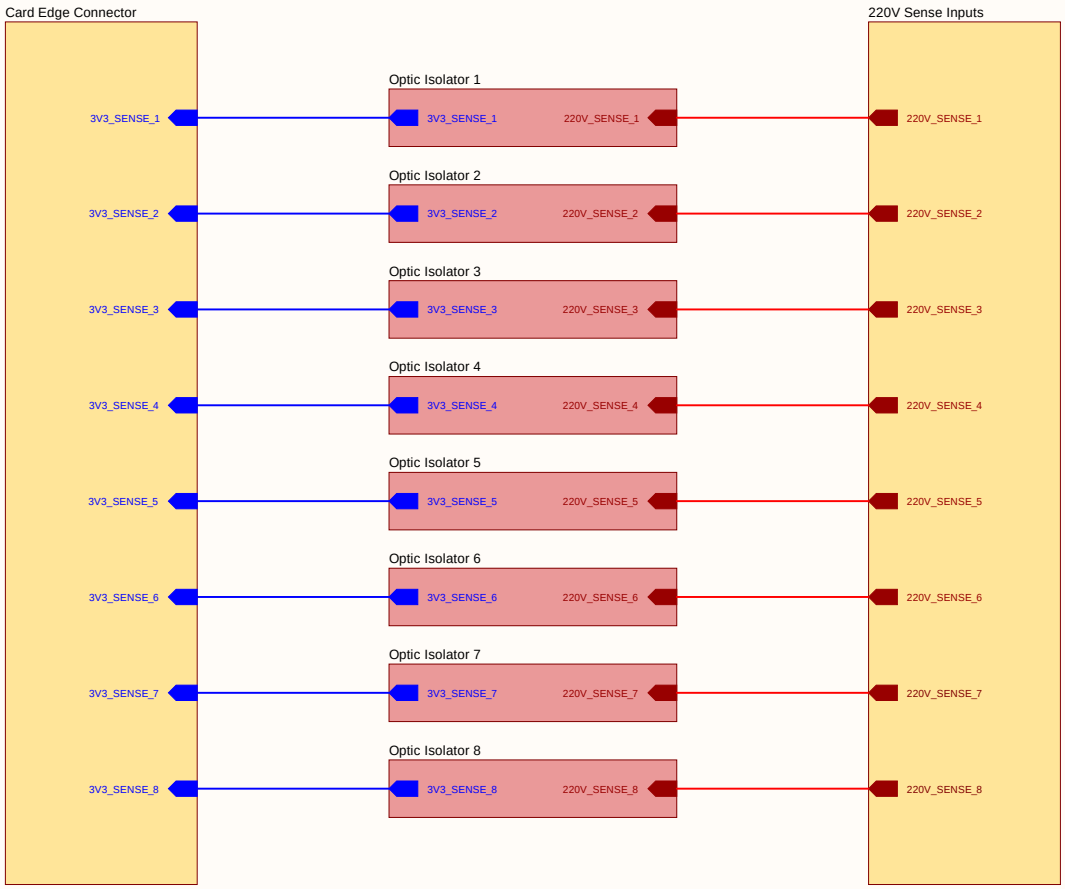

www.github.com/akkoyun/B001AA

B302AA Block Diagram		Engineer : Gunce Akkoyun	STF Res-Dev
		Customer : STF Irrigation	Buyuk Kayacik Mah. 4. OSB
Size : A4	Project : PowerStat	Product ID : --	103. Cad. No : 12
		Module ID : B302AA-PCIe	Selcuklu / Konya Türkiye
Date : 15.06.2023	Time : 13:46:22	Page : 1 / 11	Version : R1
File : Block Diagram.SchDoc			Revision : 00.00.01

Copyright 2022 STF Tarim (Commercial Secret)

© 2021 All rights reserved.
This document may not, in whole or in part, be copied, photocopied, reproduced, translated or converted to any electronic or machine readable from without prior written permission of Mehmet Günce Akkoyun.
Engineer contact : akkoyun@me.com

Property of STF Irrigation

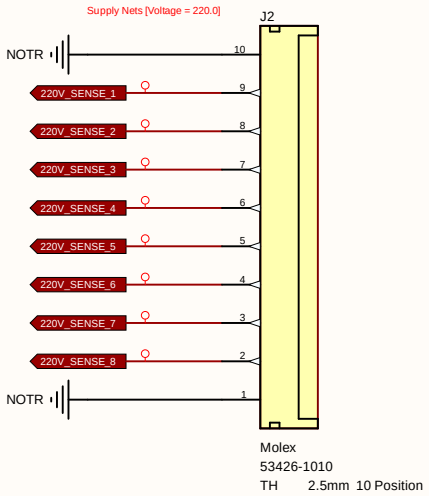

www.github.com/akkoyun/B001AA

220V Sense Input Connector		Engineer : Gunce Akkoyun	STF Res-Dev
		Customer : STF Irrigation	Buyuk Kayacik Mah. 4. OSB
Size : A4	Project : PowerStat	Product ID : --	103. Cad. No : 12
		Module ID : B302AA-PCIe	Selcuklu / Konya Türkiye
Date : 15.06.2023	Time : 13:46:22 Page : 2 / 11	Version : R1	
File : 220V Sense Input Socket.SchDoc		Revision : 00.00.01	

Copyright 2022 STF Tarim (Commercial Secret)

© 2021 All rights reserved.
This document may not, in whole or in part, be copied, photocopied, reproduced, translated or converted to any electronic or machine readable from without prior written permission of Mehmet Günce Akkoyun.
Engineer contact : akkoyun@me.com

Property of STF Irrigation

J1

Bus Type : Mini PCI Express
Mating Connector : TE-1775862-2
Pitch : 0.8 mm
Number of Positions : 52

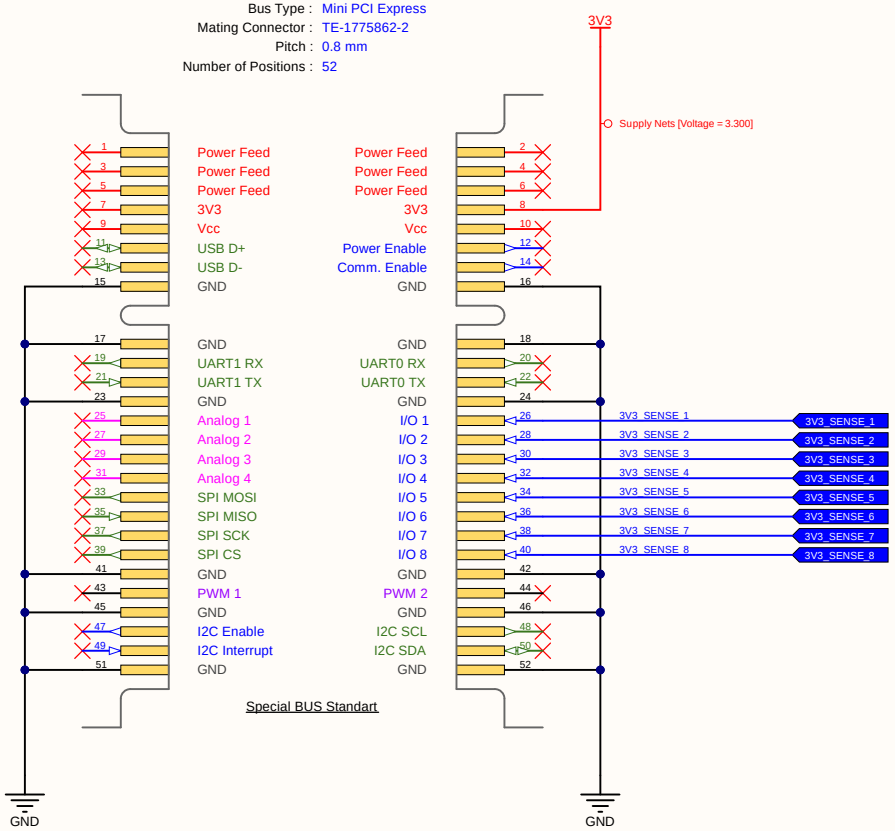

Special BUS Standart

www.github.com/akkoyun/B001AA

PCIe Card Edge Connector		Engineer : Gunce Akkoyun	STF Res-Dev
		Customer : STF Irrigation	Buyuk Kayacik Mah. 4. OSB
Size : A4	Project : PowerStat	Product ID : --	103. Cad. No : 12
		Module ID : B302AA-PCIe	Selcuklu / Konya Türkiye
Date : 15.06.2023	Time : 13:46:22	Page : 3 / 11	Version : R1
File : Card Edge Connector.SchDoc			Revision : 00.00.01

Copyright 2022 STF Tarim (Commercial Secret)

© 2021 All rights reserved.
This document may not, in whole or in part, be copied, photocopied, reproduced, translated or converted to any electronic or machine readable from without prior written permission of Mehmet Günce Akkoyun.
Engineer contact : akkoyun@me.com

Property of STF Irrigation

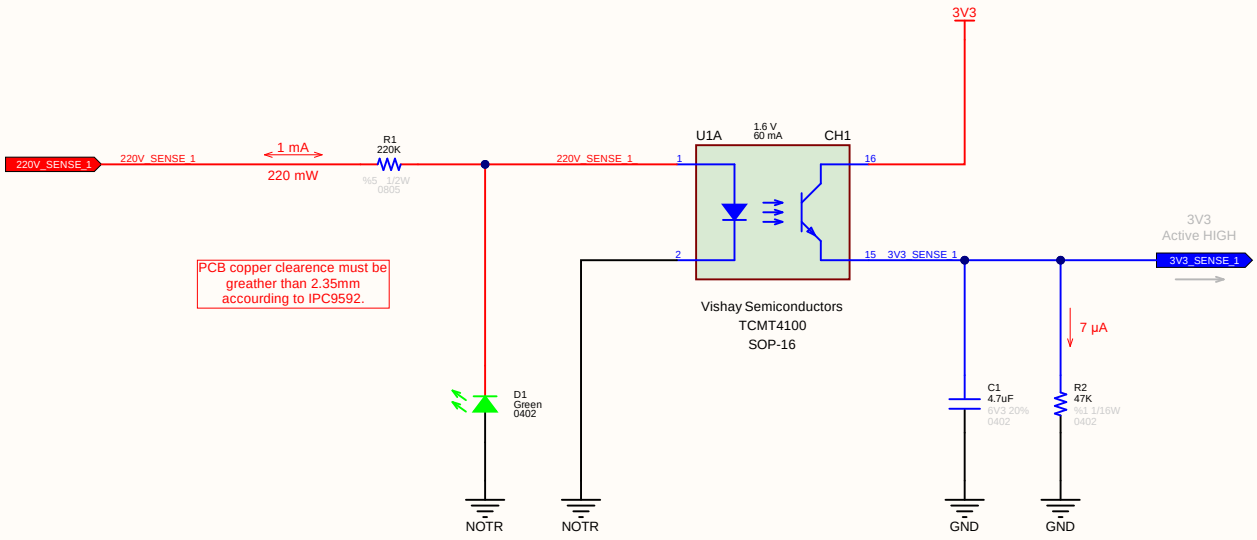

www.github.com/akkoyun/B001AA

Opto Isolator 1		Engineer : Gunce Akkoyun	STF Res-Dev
		Customer : STF Irrigation	Buyuk Kayacik Mah. 4. OSB
Size : A4	Project : PowerStat	Product ID : --	103. Cad. No : 12
		Module ID : B302AA-PCIe	Selcuklu / Konya Türkiye
Date : 15.06.2023	Time : 13:46:22 Page : 4 / 11	Version : R1	
File : Opto Isolator 1.SchDoc		Revision : 00.00.01	

Copyright 2022 STF Tarim (Commercial Secret)

© 2021 All rights reserved.
This document may not, in whole or in part, be copied, photocopied, reproduced, translated or converted to any electronic or machine readable from without prior written permission of Mehmet Günce Akkoyun.
Engineer contact : akkoyun@me.com

Property of STF Irrigation

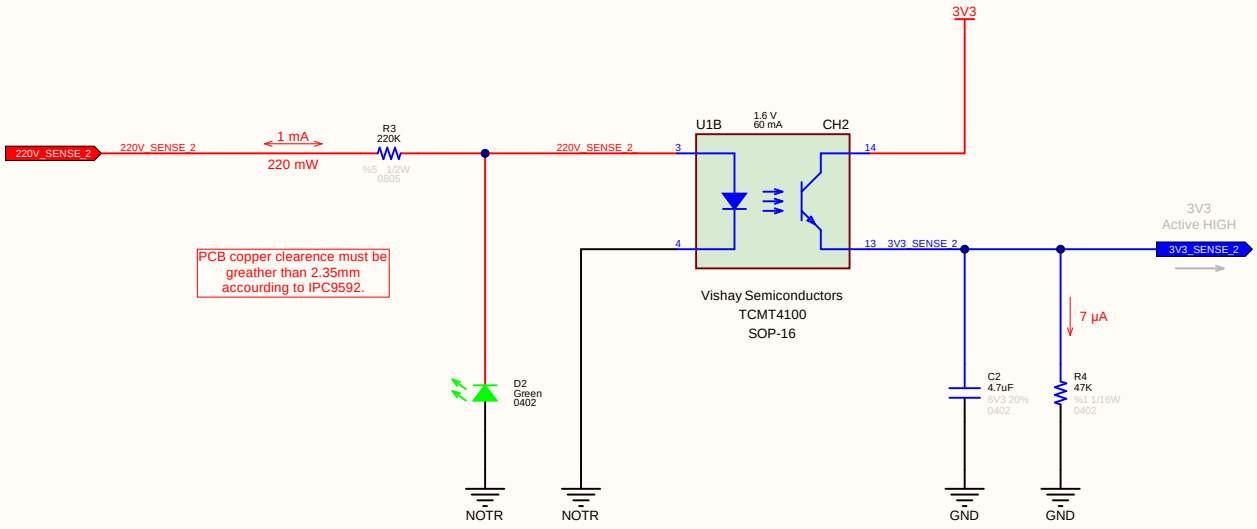

www.github.com/akkoyun/B001AA

Opto Isolator 2		Engineer : Gunce Akkoyun	STF Res-Dev
		Customer : STF Irrigation	Buyuk Kayacik Mah. 4. OSB
Size : A4	Project : PowerStat	Product ID : --	103. Cad. No : 12
		Module ID : B302AA-PCIe	Selcuklu / Konya Türkiye
Date : 15.06.2023	Time : 13:46:22	Page : 5 / 11	Version : R1
File : Opto Isolator 2.SchDoc			Revision : 00.00.01

Copyright 2022 STF Tarim (Commercial Secret)

© 2021 All rights reserved.
This document may not, in whole or in part, be copied, photocopied, reproduced, translated or converted to any electronic or machine readable from without prior written permission of Mehmet Günce Akkoyun.
Engineer contact : akkoyun@me.com

Property of STF Irrigation

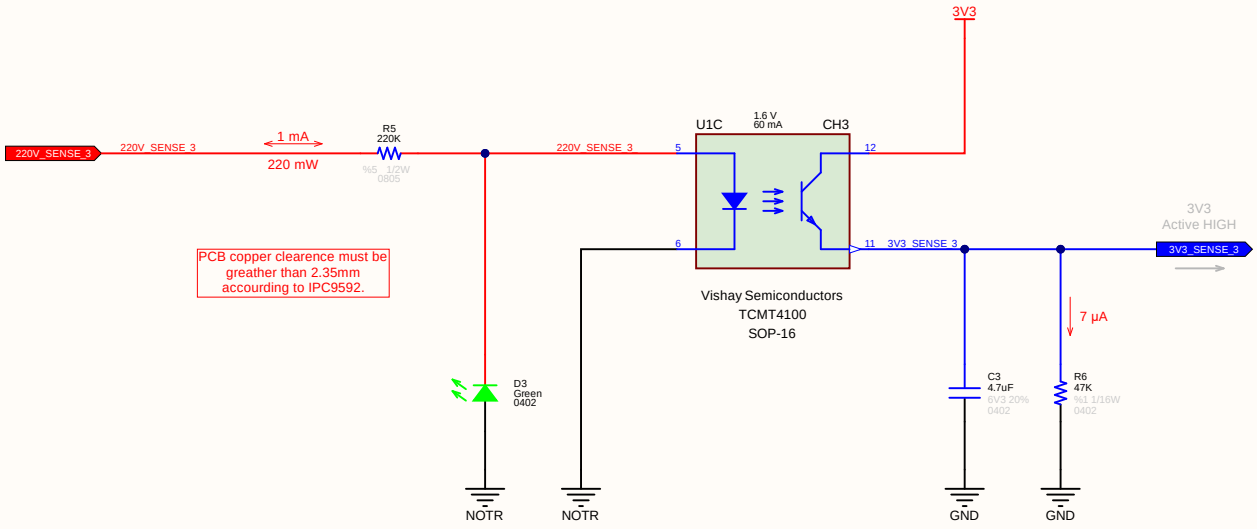

www.github.com/akkoyun/B001AA

Opto Isolator 3		Engineer : Gunce Akkoyun	STF Res-Dev
		Customer : STF Irrigation	Buyuk Kayacik Mah. 4. OSB
Size : A4	Project : PowerStat	Product ID : --	103. Cad. No : 12
		Module ID : B302AA-PCIe	Selcuklu / Konya Türkiye
Date : 15.06.2023	Time : 13:46:22	Page : 6 / 11	Version : R1
File : Opto Isolator 3.SchDoc			Revision : 00.00.01

Copyright 2022 STF Tarim (Commercial Secret)

© 2021 All rights reserved.
This document may not, in whole or in part, be copied, photocopied, reproduced, translated or converted to any electronic or machine readable from without prior written permission of Mehmet Günce Akkoyun.
Engineer contact : akkoyun@me.com

Property of STF Irrigation

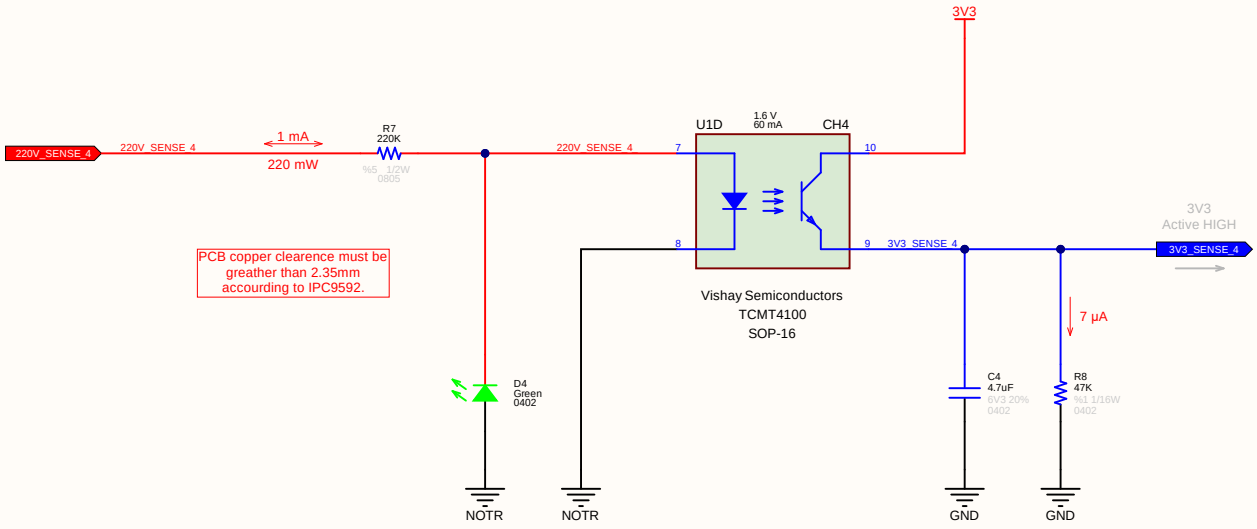

www.github.com/akkoyun/B001AA

Opto Isolator 4		Engineer : Gunce Akkoyun	STF Res-Dev
		Customer : STF Irrigation	Buyuk Kayacik Mah. 4. OSB
Size : A4	Project : PowerStat	Product ID : --	103. Cad. No : 12
		Module ID : B302AA-PCIe	Selcuklu / Konya Türkiye
Date : 15.06.2023	Time : 13:46:22	Page : 7 / 11	Version : R1
File : Opto Isolator 4.SchDoc			Revision : 00.00.01

Copyright 2022 STF Tarim (Commercial Secret)

© 2021 All rights reserved.
This document may not, in whole or in part, be copied, photocopied, reproduced, translated or converted to any electronic or machine readable from without prior written permission of Mehmet Günce Akkoyun.
Engineer contact : akkoyun@me.com

Property of STF Irrigation

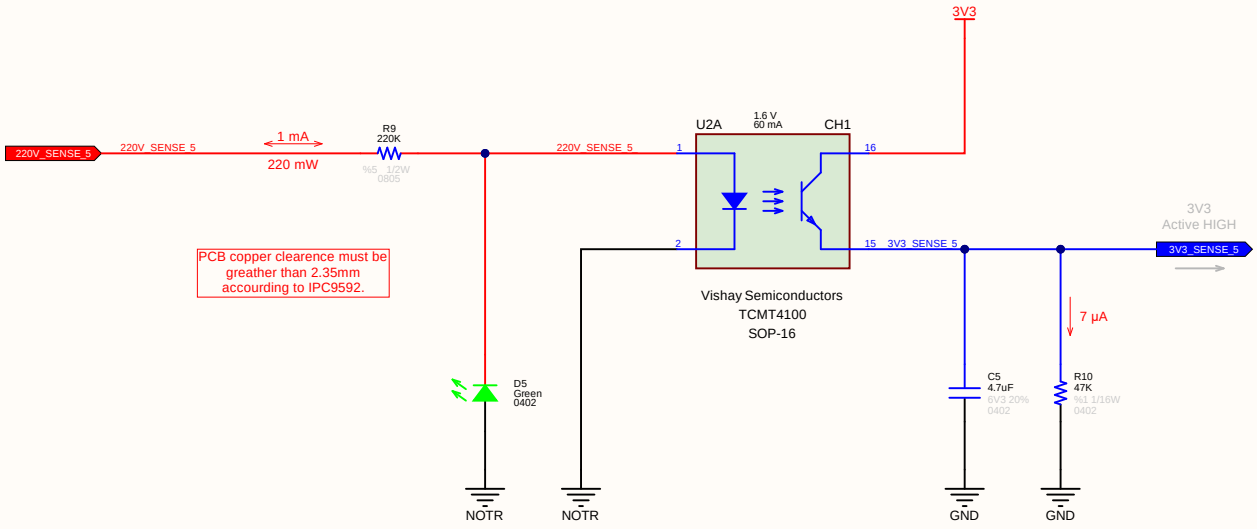

www.github.com/akkoyun/B001AA

Opto Isolator 5		Engineer : Gunce Akkoyun	STF Res-Dev
		Customer : STF Irrigation	Buyuk Kayacik Mah. 4. OSB
Size : A4	Project : PowerStat	Product ID : --	103. Cad. No : 12
		Module ID : B302AA-PCIe	Selcuklu / Konya Türkiye
Date : 15.06.2023	Time : 13:46:22	Page : 8 / 11	Version : R1
File : Opto Isolator 5.SchDoc		Revision : 00.00.01	

Copyright 2022 STF Tarim (Commercial Secret)

© 2021 All rights reserved.
This document may not, in whole or in part, be copied, photocopied, reproduced, translated or converted to any electronic or machine readable from without prior written permission of Mehmet Günce Akkoyun.
Engineer contact : akkoyun@me.com

Property of STF Irrigation

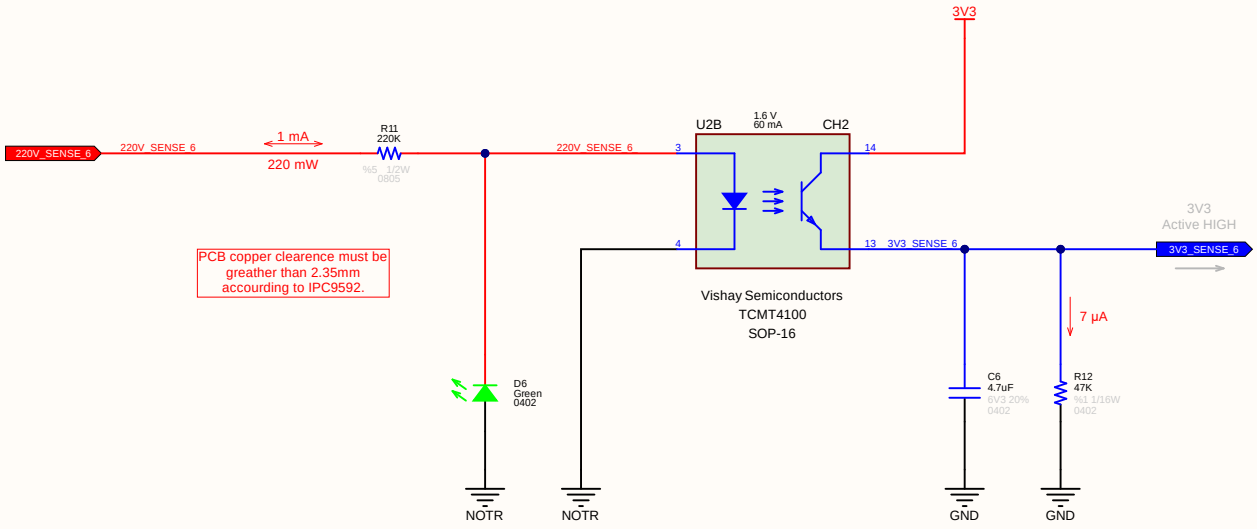

www.github.com/akkoyun/B001AA

Opto Isolator 6		Engineer : Gunce Akkoyun	**STF Res-Dev**
		Customer : STF Irrigation	Buyuk Kayacik Mah. 4. OSB
Size : A4	Project : PowerStat	Product ID : --	103. Cad. No : 12
		Module ID : B302AA-PCIe	Selcuklu / Konya Türkiye
Date : 15.06.2023	Time : 13:46:23	Page : 9 / 11	Version : R1
File : Opto Isolator 6.SchDoc			Revision : 00.00.01

Copyright 2022 STF Tarim (Commercial Secret)

© 2021 All rights reserved.
This document may not, in whole or in part, be copied, photocopied, reproduced, translated or converted to any electronic or machine readable from without prior written permission of Mehmet Günce Akkoyun.
Engineer contact : akkoyun@me.com

Property of STF Irrigation

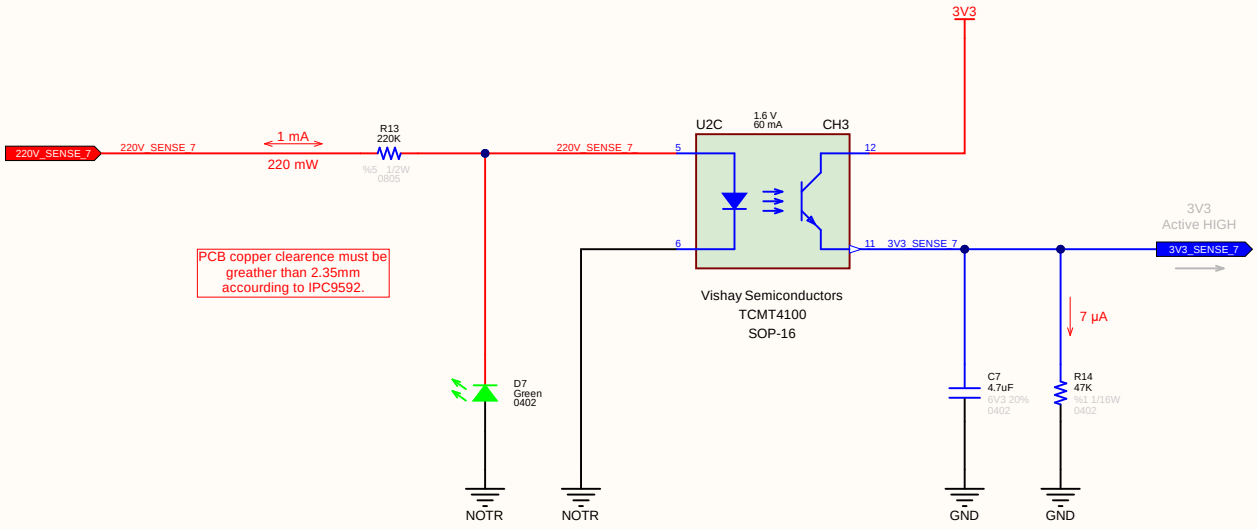

www.github.com/akkoyun/B001AA

Opto Isolator 7		Engineer : Gunce Akkoyun	**STF Res-Dev**
		Customer : STF Irrigation	Buyuk Kayacik Mah. 4. OSB
Size : A4	Project : PowerStat	Product ID : --	103. Cad. No : 12
		Module ID : B302AA-PCIe	Selcuklu / Konya Türkiye
Date : 15.06.2023	Time : 13:46:23	Page : 10 / 11	Version : R1
File : Opto Isolator 7.SchDoc			Revision : 00.00.01

Copyright 2022 STF Tarim (Commercial Secret)

© 2021 All rights reserved.
This document may not, in whole or in part, be copied, photocopied, reproduced, translated or converted to any electronic or machine readable from without prior written permission of Mehmet Günce Akkoyun.
Engineer contact : akkoyun@me.com

Property of STF Irrigation

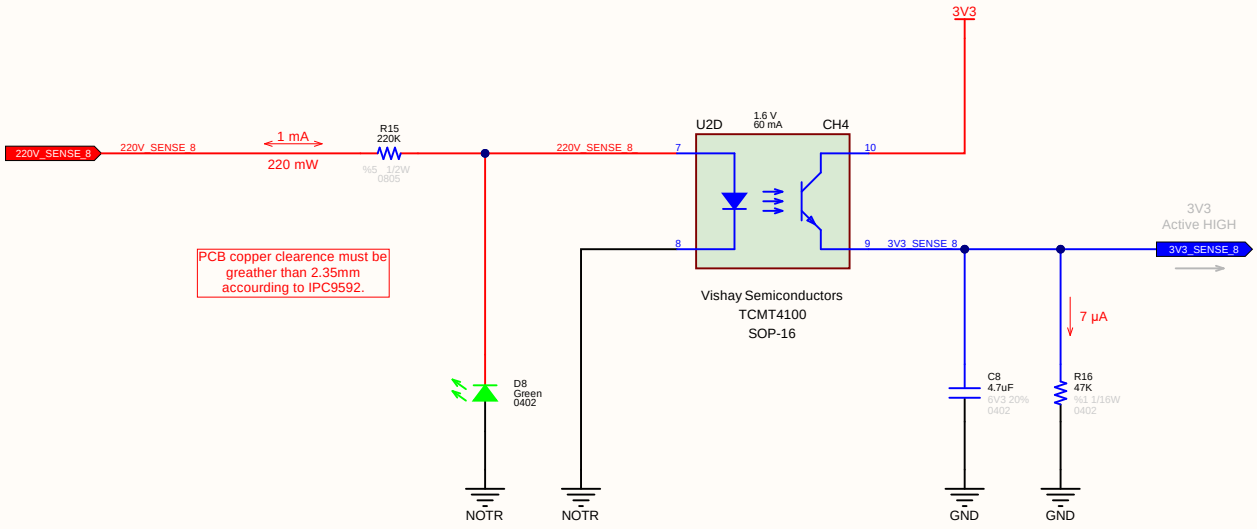

www.github.com/akkoyun/B001AA

Opto Isolator 8		Engineer : Gunce Akkoyun	STF Res-Dev
		Customer : STF Irrigation	Buyuk Kayacik Mah. 4. OSB
Size : A4	Project : PowerStat	Product ID : --	103. Cad. No : 12
		Module ID : B302AA-PCIe	Selcuklu / Konya Türkiye
Date : 15.06.2023	Time : 13:46:23	Page : 11 / 11	Version : R1
File : Opto Isolator 8.SchDoc			Revision : 00.00.01

Copyright 2022 STF Tarim (Commercial Secret)